REV	DESCRIPTION	DESIGN	APPROVAL	DATE
A0	NEW VERSION	Colinye	Jerry	2023/12/06
A1	NEW PRODUCT SPECIFICATIONS ADDED/新增产品规格	Colinye	Jerry	2024/03/18

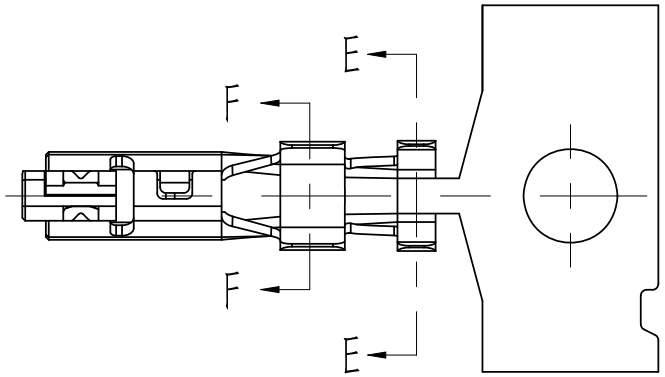

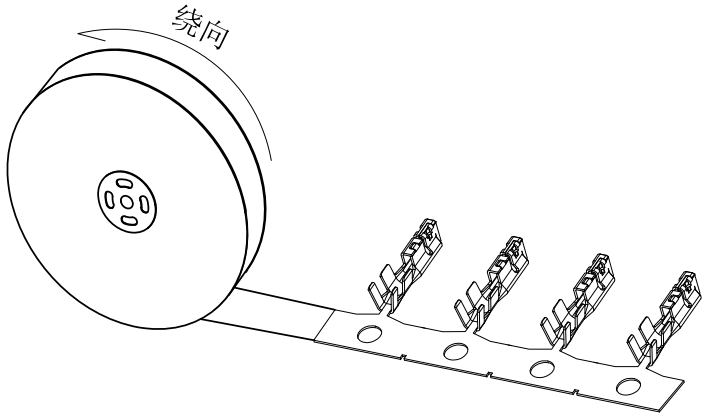

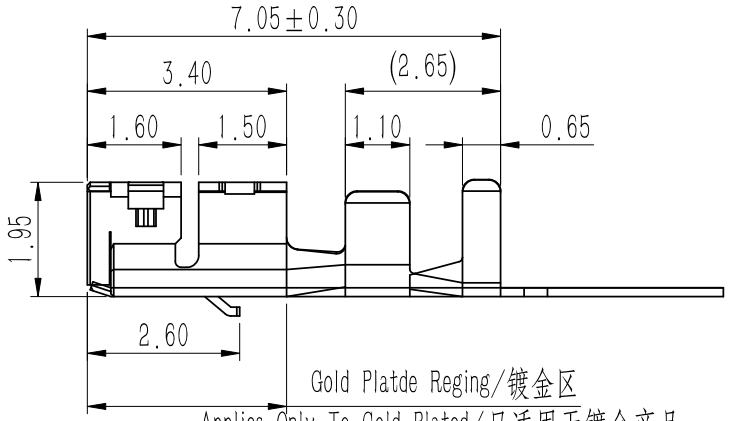

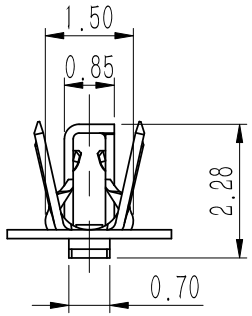

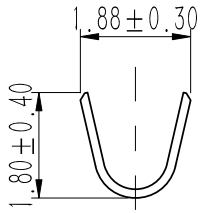

SECTION:F–F

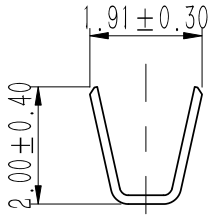

SECTION:E–E

NOTES:

1. Material/材质: See Table–1/见表–1;
2. Finish/表面处理: See Table–1/见表–1;
3. Wire Range/线规:AWG#22; O.D:φ1.50mm Max;
4. Contact surface should not have burrs,Other areas burrs 0.10mm Max;
   端子接触面不能有毛刺，其他区域毛刺不能超过0.10mm;
5. RoHS Compliance /产品符合RoHS;
6. Applicable Housing/适配胶壳961–XX1X–027;
7. Order Information/编码原则: 922–050–X111
   └ See Table–1/见表–1

Table–1

NO	P/N	Material/材质	Finish/表面处理
1	922–050–1111	Copper Alloy/铜合金, T=0.15mm	Tin–Plated/镀锡
2	922–050–5111	Copper Alloy/铜合金, T=0.15mm	Gold–Plated/镀金

X.± 0.35	X.° ± 1°
.X± 0.25	.X° ± 0.5°
.XX± 0.15	.XX° ± /
.XXX± 0.05	.XXX° ± /
UNITS:	mm

The information in this document is property of JIDCON company and should not be copied or reproduced in any other way, without written permission.

Guangdong JiDe Precision Electronics Co., Ltd
广东济德精密电子有限公司

TITLE: 0.50mm FEMALE TERMINAL	PART NO. 922–050–X111
APPD:	DWG NO: C–922–050–X111
CHKD:	
DRAW:	

SCALE	SHEET	REV.
1:1	1/1	A1